NOTICE OF INCORPORATION

United States Legal Document

☞ All citizens and residents are hereby advised that this is a legally binding document duly incorporated by reference and that failure to comply with such requirements as hereby detailed within may subject you to criminal or civil penalties under the law. Ignorance of the law shall not excuse noncompliance and it is the responsibility of the citizens to inform themselves as to the laws that are enacted in the United States of America and in the states and cities contained therein. ☜

* *
*

ASTM F1957-1999: Standard Test Method for Composite Foam Hardness-Durometer Hardness as required by:
State of Pennsylvania, 7 PAC 139.41
State of Michigan, MAC R 408.802 Rule 3
State of Florida, FAC SF-8.0011(i)
State of Virginia, 13 VAC 5-31-40(A)(2)

This Document Posted By
Public.Resource.Org, Inc.,
a California Nonprofit
Organization.

Not Affiliated Or
Authorized by ASTM
or by the United States
Government

ASTM Logo Removed

Designation: F 1957 – 99

Standard Test Method for Composite Foam Hardness-Durometer Hardness[1]

This standard is issued under the fixed designation F 1957; the number immediately following the designation indicates the year of original adoption or, in the case of revision, the year of last revision. A number in parentheses indicates the year of last reapproval. A superscript epsilon (ϵ) indicates an editorial change since the last revision or reapproval.

1. Scope

1.1 This test method describes a type of composite foam hardness measurement device known as durometer: Type CF. The procedure for determining indentation hardness of substances comprised of two or more elastomeric materials, one of which is a foam or foam like material. These are classified as composite foam structures. The composite foam product may have an armature made of a material suitable for adding structural integrity including but not limited to metal, plastic, or wood. This construction is typical for lapbar restraints, seating, and other restraint devices, as well as some show elements.

1.2 This test method is not equivalent to other indentation hardness methods and instrument types, specifically those described in Test Methods D 1415 and D 2240.

1.3 The values stated in SI units are to be regarded as standard. The values given in parentheses are for information only. Many of the stated dimensions in SI are direct conversions from the U.S. customary system to accommodate the instrumentation, practices, and procedures that existed prior to the Metric Conversion Act of 1975.

1.4 All materials, instruments, or equipment used for the determination of mass or dimension shall have traceability to the National Institute for Standards and Technology (NIST) or other internationally recognized organizations.

1.5 This test method is not a safety standard as it pertains to ride legislation. The use of this test method is optional based upon an agreement between customers and suppliers of foam products.

1.6 *This standard does not purport to address all of the safety concerns, if any, associated with its use. It is the responsibility of the user of this standard to establish appropriate safety and health practices and determine the applicability of regulatory limitations prior to use.*

2. Referenced Documents

2.1 *ASTM Standards:*

D 374 Test Methods for Thickness of Solid Electrical Insulation[2]

D 618 Practice for Conditioning Plastics and Electrical Insulating Materials for Testing[3]

D 785 Test Method for Rockwell Hardness of Plastics and Electrical Insulating Materials[3]

D 1349 Practice for Rubber—Standard Temperatures for Testing[4]

D 1415 Test Method for Rubber Property—International Hardness[4]

D 2240 Test Method for Rubber Property—Durometer Hardness[4]

D 4483 Practice for Determining Precision for Test Method Standards in the Rubber and Carbon Black Industries[4]

3. Summary of Test Method

3.1 This test method permits hardness measurements based on either initial indentation or indentation after a specified period of time, or both.

3.2 Those specimens, which have a durometer hardness range other than specified, shall use another suitable procedure for determining durometer hardness.

4. Significance and Use

4.1 This test method is based on the penetration by a specific type of indentor when forced into the material under specified conditions. The indentation hardness is related inversely to the penetration and is dependent on the elastic modulus and viscoelastic behavior of the material. The geometry of the indentor and the applied force influence the measurements, such that no simple relationship exists between the measurements obtained with one type of durometer and those obtained with another type of durometer or other instruments used for measuring hardness. This test method is an empirical test intended primarily for control purposes. No simple relationship exists between indentation hardness determined by this test method and any fundamental property of the material tested. For specification purposes it is recommended

[1] This test method is under the jurisdiction of ASTM Committee F-24 on Amusement Rides and Devices and is the direct responsibility of F24.10 on Test Methods.

Current edition approved Feb. 10, 1999. Published May 1999.

[2] *Annual Book of ASTM Standards*, Vol 10.01.

[3] *Annual Book of ASTM Standards*, Vol 08.01.

[4] *Annual Book of ASTM Standards*, Vol 09.01.

Copyright © ASTM International, 100 Barr Harbor Drive, PO Box C700, West Conshohocken, PA 19428-2959, United States.

that Test Method D 785 be used for hard materials and Test Method D 2240 be used for solid elatomers.

5. Apparatus

5.1 Hardness measurement apparatus, or durometer, consisting of the following components:

5.1.1 *Presser Foot*, with an orifice (to allow for the protrusion of the indentor) having a diameter as specified in Fig. 1 with the center a minimum of 38.0 mm (1.5 in.) from any edge of the flat circular presser foot.

5.1.2 *Indentor*, formed from steel rod, shaped in accordance with Fig. 2, polished over the contact area so that no flaws are visible under 20× magnification and with an indentor extension of 7.62 ± 0.04 mm (.300 ± 0.002 in.).

5.1.3 *Indentor Extension Indicating Display*, (analog or digital electronic), having a display that is an inverse function of the indentor extension.

5.1.3.1 *Digital Electronic Indicating Displays* shall indicate from 0 to 100, with no less than 100 equal divisions throughout the range, at a rate of one hardness point for each 0.50 mm (0.002 in.) of indentor movement.

5.1.3.2 *Analog Indicating Displays* shall indicate from 0 to 100, with no less 100 equal divisions throughout the range or alternatively with no less than 90 equal divisions throughout a range from 10 to 100, at a rate of one hardness point for each 0.050 mm (0.002 in.) of indentor movement.

5.1.4 *Maximum Indicators* (optional), maximum indicating pointers are auxiliary analog indicating hands designed to remain at the maximum hardness value attained until reset by the operator. Electronic maximum indicators are digital displays electronically indicating and maintaining the maximum value hardness value achieved, until reset by the operator.

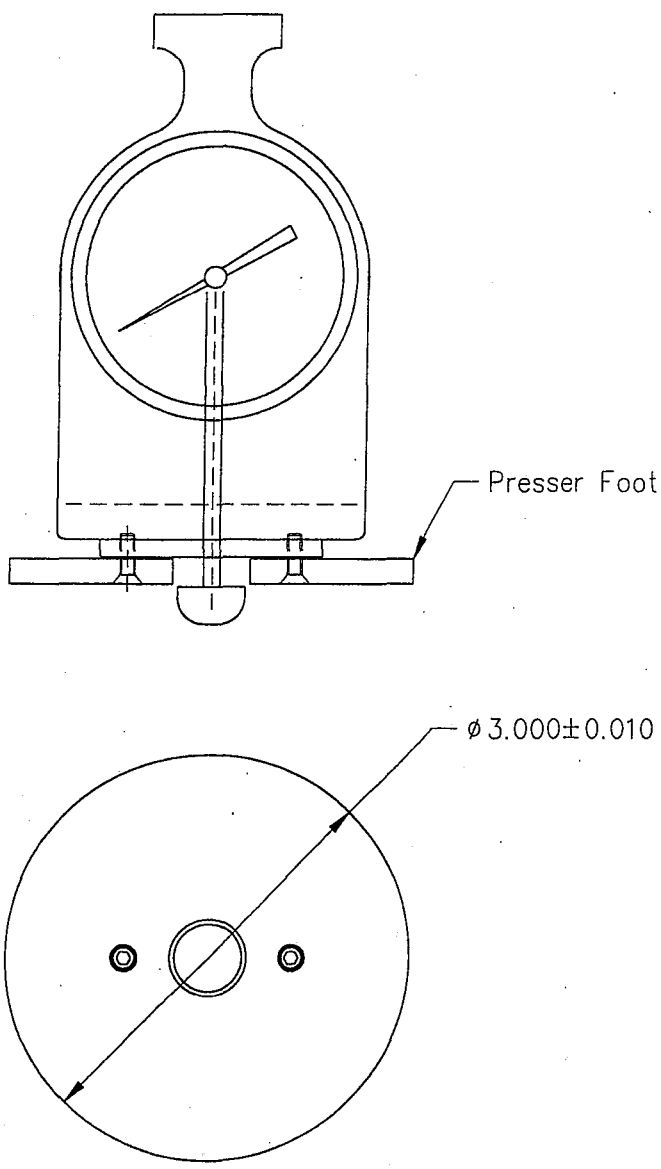

FIG. 1 Presser Foot Detail

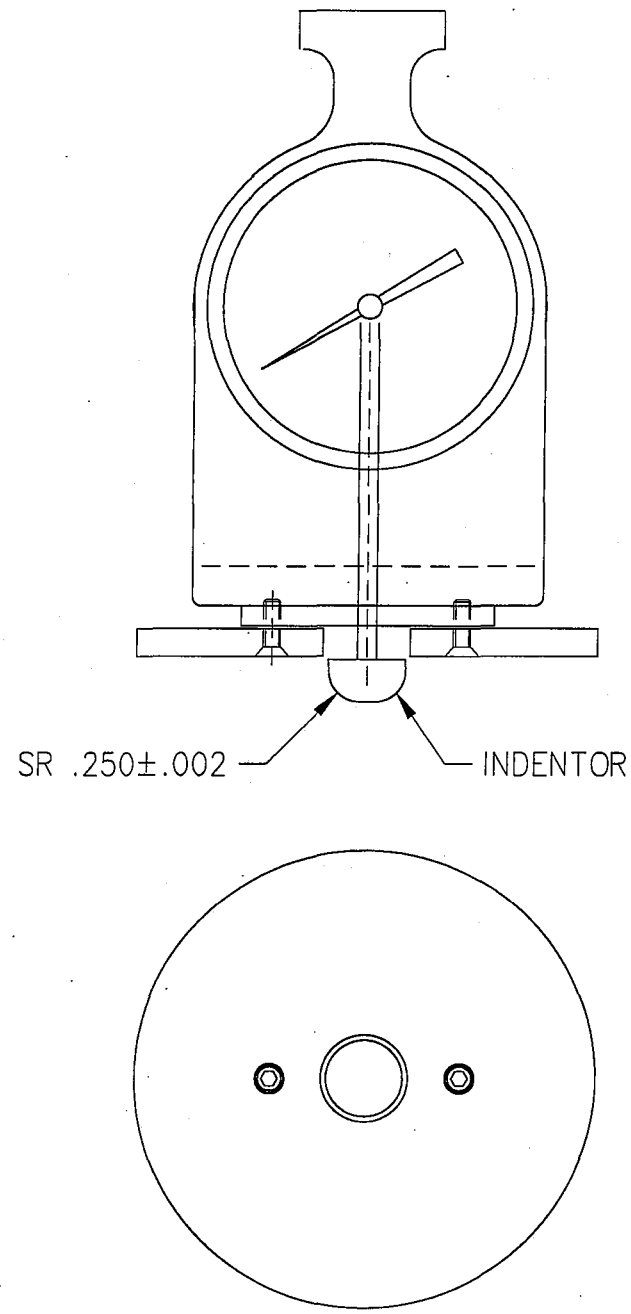

FIG. 2 Indentor Detail

5.1.4.1 Analog maximum indicating pointers have been shown to have a nominal influence on the values attained; however, this influence is greater on durometers of lesser total mainspring forces. The influence of a maximum indicating pointer shall be noted at the time of calibration in the calibration report (see 10.1.4) and when reporting hardness determinations (see 10.2.4).

5.1.4.2 Digital electronic durometers may be equipped with electronic maximum indicators that shall not influence the indicated reading or determinations attained by more than one half of the calibration tolerance stated in Table 1.

5.1.5 *Calibrated Spring*, for applying force to the indentor and capable of applying the forces as specified in Table 1.

6. Test Specimen

6.1 The test specimen, herein referred to as "specimen" or "test specimen" interchangeably, shall be at least 25.4 mm (1.00 in.) thick, herein, unless it is known that results equivalent to the 25.4 mm (1.00 in.) values are obtained with a thinner test specimen. On specimens with solid armatures, it is suggested that readings not be taken in areas close to the armature as this may affect the readings.

6.1.1 The lateral dimensions of the test specimen shall be sufficient to permit measurements at least 12.0 mm (0.48 in.) from any edge unless it is known that identical results are obtained when measurements are made at a lesser distance from an edge.

6.1.2 The surfaces of the test specimen shall be flat and parallel over a sufficient area to permit the presser foot to contact the specimen over an area having a radius of at least 30.0 mm (1.18 in.) from the indentor point if possible. Variations are acceptable as agreed upon between laboratories or between customer and supplier. The test specimen shall be supported suitably to provide for positioning and stability. A suitable hardness determination may be difficult to obtain on an uneven or rough point of contact with the indentor.

TABLE 1 Durometer Spring Force Calibration

Indicated Value	Force, N	Force, lbf
0	1.099	0.247
10	9.928	2.232
20	18.757	4.217
30	27.586	6.202
40	36.415	8.186
50	45.244	10.171
60	54.073	12.156
70	62.902	14.141
80	71.731	16.126
90	80.560	18.111
100	89.389	20.095
Calibration Tolerance	±0.893	±0.200

7. Calibration

7.1 *Calibration Device*—The durometer spring shall be calibrated by supporting the durometer in a calibrating device in a vertical position and applying a measurable force to the indentor tip. The force may be measured by means of a balance or by an electronic force cell. The calibrating device shall be capable of measuring applied force to within 50 % of the calibration tolerance described in Table 1. Care should be taken to ensure that the force is applied vertically to the indentor tip, as lateral force will cause errors in calibration.

7.2 *Indentor Extension*—Indentor extension and shape shall be in accordance with 5.1.2 and Fig. 2.

7.3 *Indentor Extension Adjustment Procedure*:

7.3.1 *Dimensional Gage Blocks*:

7.3.1.1 The presser foot must be attached to the durometer gage before adjustment. This allows a nominal indentor extension of 7.62 mm (.300 in.).

7.3.1.2 Place precision ground dimensional blocks (Grade B or better) on the test specimen support table and beneath the durometer presser foot and indentor. Arrange the blocks so that the durometer presser foot contacts the larger block and the indentor tip is at the moment of contact with the smaller block (Fig. 3).

7.3.1.3 A combination of dimensional gage blocks may be used to achieve a difference of 7.62 +0.00, – 0.0254 mm (0.300 +0.00, –0.001 in.) between them:

7.3.2 *Indentor Extension Adjustment*:

7.3.2.1 Carefully lower the durometer presser foot until contact with the largest dimensional block, the indentor tip should be at the point of contact with the smaller block, verifying full indentor extension.

7.3.2.2 Adjust the indentor extension to 7.620 ± 0.04 mm (0.300 ± 0.002 in.), following the manufacturer's recommended procedure.

7.3.2.3 When performing the procedures in 7.3, care should be used as not to cause damage to the indentor tip.

7.3.2.4 Parallelism of the durometer presser foot to the test specimen support surface (table), and hence the dimensional gage blocks, at the time of instrument calibration shall be in accordance with Test Methods D 374, machinist's micrometers.

7.4 *Indicator Display Adjustment (Analog and Digital)*:

7.4.1 After adjusting the indentor extension as indicated in 7.3, use an identical arrangement of dimensional gage blocks to verify the linear relationship between indentor travel and indicated display at two points: 0 and 100. Following the manufacturer's recommendations, make adjustments so that the indicator displays a value equal to the indentor travel measured to within:

± ½ durometer units measured at 0;
± ½ durometer units measured at 100, and
± 1½ durometer units at all points enumerated in 7.5.

7.4.2 Each durometer point indicated is equal to 0.050 mm (0.002 in.) of indentor travel.

7.5 *Spring Calibration*—The durometer spring shall be calibrated at displayed readings 20, 30, 40, 50, 60, 70, 80, and 90. The measured force (9.8 × mass in kilograms) shall be within the calibration tolerance specified in Table 1, which

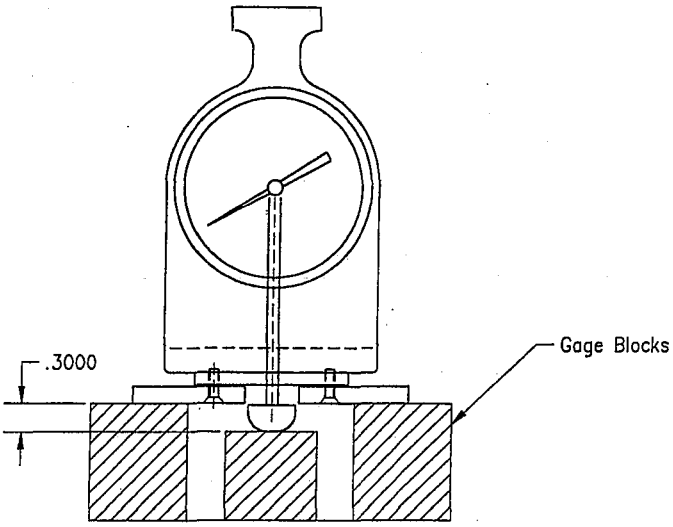

Gage Block Setup for "0" Reading

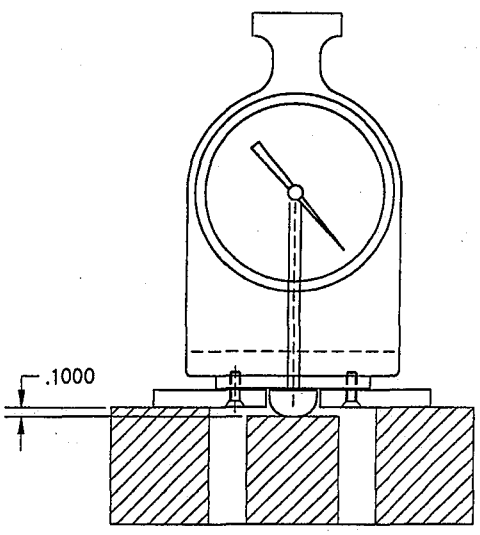

Gage Block Setup for "100" Reading

FIG. 3 Indentor Extension Calibration Setup

identifies the measured force applied to the indentor for the entire range of the instrument, although it is necessary only to verify the spring calibration at points listed herein.

7.6 *Spring Calibration Procedure*:

7.6.1 Assure that the indentor extension has been adjusted in accordance with 7.3 and the linear relationship between indentor travel and indicated display is as specified in 7.4.

7.6.2 Place the durometer in the calibration device (see 7.1). Apply the forces indicated in Table 1 so that the forces applied are aligned with the centerline of the indentor in a fashion that eliminates shock or vibration and adjust the durometer in accordance with the manufacturer's recommendations.

7.7 The metal or rubber reference blocks provided for checking durometer operation and state of calibration are not to be relied upon as calibration standards. The calibration procedures outlined in Section 7 are the only valid calibration procedures.

7.8 Spring force calibration tolerance is ±1.0 durometer unit. Spring force calibration tolerance is calculated as 1 %.

7.9 *Spring Force Combinations*:

7.9.1 *For Type CF Durometers*:

$$\text{force, N} = 1.0987 + 0.8829\, H_{CF} \quad (1)$$

where:

H_{CF} = one durometer unit on Type CF durometers.

8. Instrument and Test Specimen Conditioning

8.1 Tests or instrument calibrations shall be conducted at 23.0 ± 2.0° C (73.4 ± 3.6° F).

8.2 The instrument and specimen(s) to be tested shall be maintained at 23.0 ± 2.0° C (73.4 ± 3.6° F) for a minimum of 12 h prior to performing a test or calibration.

8.3 For materials whose hardness depends on relative humidity, the test specimens shall be conditioned in accordance with Procedure A of Practice D 618 and tested under the same conditions.

8.3.1 Accordingly, the relative humidity at the time of a test shall be reported in 10.2.2.

8.3.2 The relative humidity may be reported in 10.2.2 when the influence of relative humidity on the hardness of the test specimen is not known.

8.3.3 The relative humidity at the time of instrument calibration shall be reported in 10.1.6.

8.4 No conclusive evaluation has been made on durometers at temperatures other than 23.0 ± 2.0 °C (73.4 ± 3.6 °F). Conditioning at temperatures other than the above may show changes in calibration. Durometer use at temperatures other than the above should be decided between customer and supplier (see Practice D 1349).

8.5 These procedures may be modified if agreed upon between laboratories or between customer and supplier.

9. Procedure

9.1 *Manual (Hand-Held) Durometer Testing*:

9.1.1 Care shall be exercised to minimize the exposure of the instrument to environmental conditions that are adverse to the performance of the instrument or adversely influence test results.

9.1.2 Place the test specimen on a flat, hard, horizontal surface. Hold the durometer in a vertical position with the indentor tip at a distance from any edge of the test specimen as described in Section 6, unless it is known that identical results are obtained when measurements are made with the indentor at a lesser distance.

9.1.3 Apply the indentor to the test specimen, maintaining the durometer in a vertical position keeping the presser foot parallel to the test specimen, with a firm smooth downward action that will avoid shock, rolling of the presser foot over the test specimen, or the application of lateral force to the indentor. Apply sufficient pressure to assure firm contact between the presser foot and the test specimen (see 5.2).

9.1.4 For any material covered in 1.1, after the presser foot is in contact with the test specimen, for example, the initial

indentor travel has ceased, the indicated reading shall be recorded within 1 ± 0.1 s, or after any period of time agreed upon among laboratories or between customer and supplier. If the durometer is equipped with a maximum indicator, the maximum indicated reading shall be recorded within 1 ± 0.1 s of the cessation of initial indentor travel. The indicated hardness reading may change with time.

9.1.5 Make five or more determinations of hardness at different positions on the test specimen at least 6 mm (0.24 in.) apart or in areas agreed upon between laboratories or between customer and supplier, and calculate the arithmetic mean, or alternatively calculate the median. The means of calculating the determinations shall be reported according to 10.2.8.

9.2 It is acknowledged that durometer readings below 10 or above 90 are not considered reliable. It is suggested that readings in these ranges not be recorded.

9.3 Manual operation (hand-held) of a durometer will cause variations in the results attained. Improved repeatability may be obtained by using a mass, securely affixed to the durometer and centered on the axis of the indentor. Recommended masses are those necessary to approximate the forces described in Table 1, 9.5 kg for Type CF.

10. Report

10.1 *Instrument Calibration Report (Durometer or Operating Stand)*—The following information shall be reported:

10.1.1 Date of calibration.

10.1.2 Date of last calibration.

10.1.3 Manufacturer, type, model, and serial number of the instrument, and a notation when a maximum indicator or timing device is present.

10.1.4 Values obtained (pre- and post- calibration results), including a notation of the influence of a maximum indicator, if present. The method of reporting the calibrated value shall be by attaining the arithmetic mean of the determinations.

10.1.5 Ambient temperature.

10.1.6 Relative humidity (see 8.3).

10.1.7 Technician identification.

10.1.8 Applicable standards to which the instrument is calibrated.

10.1.9 Calibrating instrument information shall include type, serial number, manufacturer, date of last calibration and a statement of traceability of standards used to NIST or other acceptable organization (see 1.4).

10.2 *Hardness Measurement Report*—The following information shall be included:

10.2.1 Date of test.

10.2.2 Relative humidity (see 8.3).

10.2.3 Ambient temperature.

10.2.4 Manufacturer, type, and serial number of the durometer, or operating stand, or both, including a notation when a maximum indicator or timing device is present and date of last calibration.

10.2.5 Means of testing, whether manual (hand-held) or operating stand.

10.2.6 Description of test specimen, including thickness, location of test reading, and the vulcanization date.

10.2.7 Complete identification of material tested.

10.2.8 Hardness value obtained and method of calculation, either arithmetic mean or alternatively, the median.

10.2.9 Indentation hardness time interval at which determination is made.

10.2.10 Readings may be reported in the form as follows:

$$\text{CF/60/1/5x or CF/60/1/5}\sim \quad (2)$$

where:

CF	=	type of durometer,
60	=	either the mean or the median of the determinations,
1	=	time that the presser foot is in contact with the test specimen or from an electronic timing device, s,
5	=	number of determinations, and
x or ~	=	method of calculation, either arithmetic mean (x) or the median (~).

11. Precision and Bias

11.1 These precision and bias statements have been prepared in accordance with Practice D 4483. Refer to this practice for terminology and other testing and statistical concepts.

11.2 The Type 1 precision for the Type CF method has been determined from an interlaboratory program with four materials of varying hardness, with six participating laboratories. Tests have been conducted on two separate days in each laboratory for the Type CF testing program.

11.3 The precision results in this section give an estimate of the precision of this test method with the materials (composite foams) used in the particular interlaboratory program as described in 11.1 and 11.2. The precision parameters should not be used for acceptance or rejection testing, or both, of any group of materials without documentation that they are applicable to those particular materials and the specific testing protocols that include this test method.

11.4 This test method does not attempt to identify normal production tolerances for foam products. Allowable durometer variations shall be agreed upon between the customer and the supplier, or between laboratories.

11.5 A test result for hardness was the median of five individual hardness readings on each day in each laboratory.

11.6 Table 2 shows the precision results for Type CF method.

11.7 *Precision*—The precision of this test method may be expressed in the format of the following statements, which use an appropriate value r, R, (r), or (R), that is, that value to be used in decisions about test results (obtained with the test

TABLE 2 Type 1 Precision — Type CF Durometer Method

Material	Mean	S_r[A]	r[B]	(r)[C]	S_R[D]	R[E]	(R)[F]
1	15.99	0.393	1.11	6.9	0.154	0.44	2.7
2	20.29	0.396	1.12	5.5	0.157	0.44	2.1
3	34.69	0.348	0.98	2.8	0.121	0.34	0.9
4	31.00	0.289	0.81	2.6	0.083	0.24	0.7

[A] S_r = repeatability standard deviation, measurement units.
[B] r = repeatability = 2.83 × S_r, measurement units.
[C] (r) = repeatability, relative, (that is, in percent).
[D] S_R = reproducibility standard deviation, measurement units.
[E] R = reproducibility = 2.83 × S_R, measurement units.
[F] (R) = reproducibility, relative, (that is, in percent).

method). The appropriate value is that value of r or R associated with a mean level in Table 2 closest to the mean level under consideration (at any given time, for any given material) in routine testing operation.

11.7.1 *Repeatability*—The repeatability, r, of these test methods has been established as the appropriate value tabulated in Table 2. Two single test results, obtained under normal test method procedures, that differ by more than this tabulated r (for any given level) must be considered as derived from different or nonidentical sample populations.

11.7.2 *Reproducibility*—The reproducibility, R, of these test methods has been established as the appropriate value tabulated in Table 2. Two single test results obtained in two different laboratories, under normal test method procedures, that differ by more than the tabulated R (for any given level) must be considered to have come from different or nonidentical sample populations.

11.7.3 *Repeatability and Reproducibility*—These are expressed as a percentage of the mean level, *(r)* and *(R)*, have equivalent application statements as above for r and R. For the *(r)* and *(R)* statements, the difference in the two single test results is expressed as a percentage of the arithmetic mean of the two test results.

11.8 *Bias*—In test method terminology, bias is the difference between an average test value and the reference (or true) test property value. Reference values do not exist for this test method since the value (of the test property) is exclusively defined by this test method. Bias, therefore, cannot be determined.

12. Keywords

12.1 durometer; foam; hardness; indentation hardness

The American Society for Testing and Materials takes no position respecting the validity of any patent rights asserted in connection with any item mentioned in this standard. Users of this standard are expressly advised that determination of the validity of any such patent rights, and the risk of infringement of such rights, are entirely their own responsibility.

This standard is subject to revision at any time by the responsible technical committee and must be reviewed every five years and if not revised, either reapproved or withdrawn. Your comments are invited either for revision of this standard or for additional standards and should be addressed to ASTM Headquarters. Your comments will receive careful consideration at a meeting of the responsible technical committee, which you may attend. If you feel that your comments have not received a fair hearing you should make your views known to the ASTM Committee on Standards, at the address shown below.

This standard is copyrighted by ASTM, 100 Barr Harbor Drive, PO Box C700, West Conshohocken, PA 19428-2959, United States. Individual reprints (single or multiple copies) of this standard may be obtained by contacting ASTM at the above address or at 610-832-9585 (phone), 610-832-9555 (fax), or service@astm.org (e-mail); or through the ASTM website (www.astm.org).